VAUGHN
a nudyne company

HydraStone™ TPP High Efficiency Top Mount Indirect Water Heater

Available In 35, 50, & 70 Gallon Capacities

TPP

HS
SERIES

HydraStone™ lining provides long tank life

Industry's lowest standby heat loss reduces your operating costs

Electronic controller provides accurate and reliable temperature control

- With no anode rod, maintenance is minimum
- High impact composite jacket cannot rust or corrode
- 10 year, non-prorated warranty
- Optional lifetime warranty (residential only)
- 2 year, labor allowance
- 5 year, non-prorated commercial warranty

High Performance and High Efficiency

The Vaughn HS Series Top Performer Plus (TPP) Indirect Water Heater combines advanced engineering and HydraStone™ lining to provide the industry's longest lasting and most reliable Indirect water heater. The high efficiency design includes a factory installed and field removable all copper heat exchanger coil to provide maximum hot water output while significantly reducing mineral build up. The TPP includes an electronic controller with adjustable differential to ensure delivery of temperature accurate and consistent hot water. The TPP is insulated with non-CFC polyurethane foam for the lowest stand by heat loss rating in the industry.

Applications

Residential, restaurants, schools, office buildings, and much more.

Intertek

AHRI CERTIFIED™

MADE IN USA
BUY AMERICAN ACT COMPLIANT
CONTAINS IMPORTED COMPONENTS

978-462-6683
vaughncorp.com
sales@vaughncorp.com

Field Removable Heat Exchanger

- Easy installation—no on site assembly needed
- All fittings on top of tank (except commercial)
- T&P relief valve included with every tank

HydraStone™ Lining

Actual Lining Thickness Shown

A seamless ½" thick cement lining is impervious to adverse water conditions and is proven to be the most effective method of preventing tank failure due to corrosion. The HydraStone™ lining absorbs and traps water, which then loses its oxygen and becomes inert, thus preventing tank corrosion.

Premium Insulation

2" thick polyurethane foam combined with a heat retaining Hydrastone™ lining allows less than minimum heat loss per hour.

Steel Surface

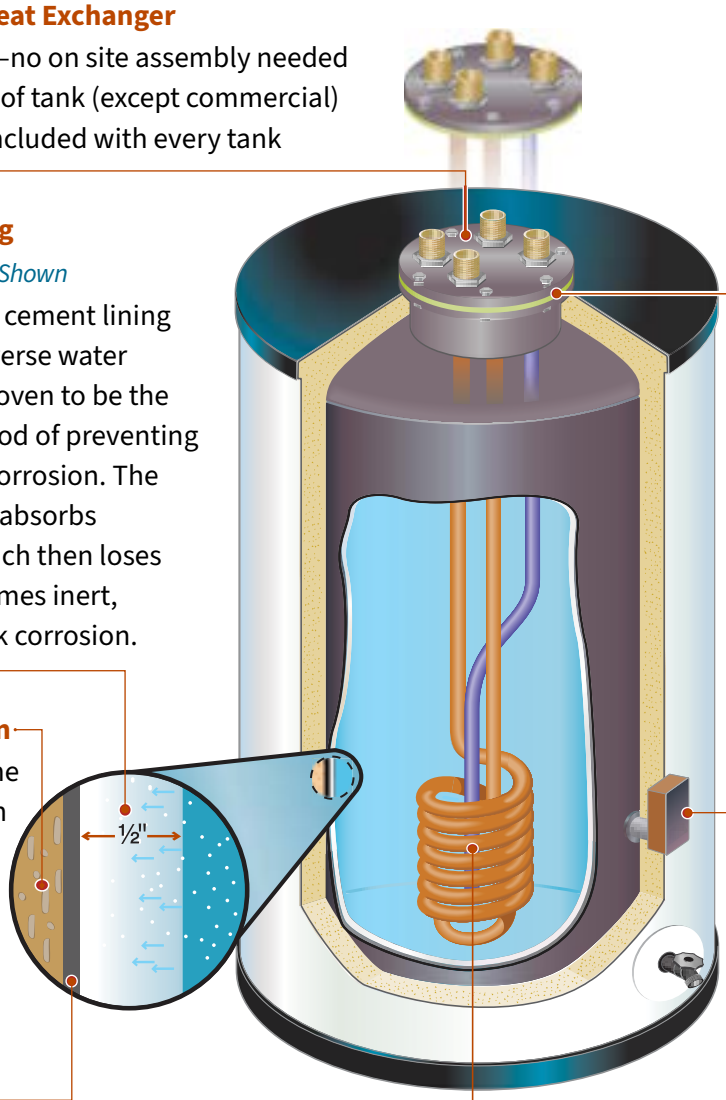

O-Ring Gasket Design

- Eliminates installation guesswork
- Simplifies coil replacement

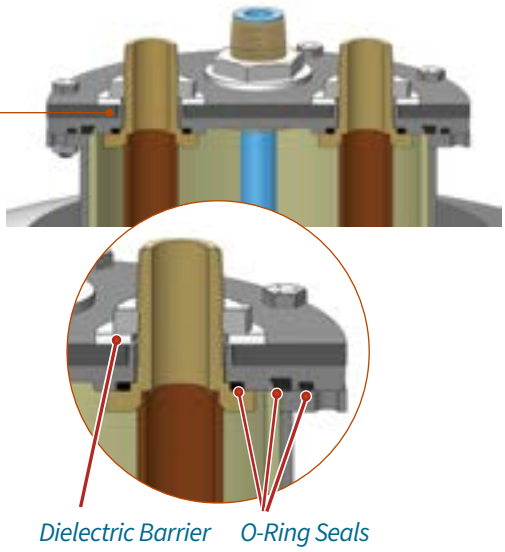

Electronic Controller

- Temperature accuracy within 2°F
- Eliminates temperature overshooting
- Multicolor LED displays operating mode on tank

NO SACRIFICIAL ANODE ROD REQUIRED

Unique Cold Water Diffuser

- Constantly washes the heat exchanger reducing mineral build-up by 50%
- Counter flow design increases heat exchanger output by more than 20%

TANK SPECIFICATIONS

Model	Jacket Diameter A	Tank Diameter B	Height to Hot Out C	Height to Pan D	Height to Thermistor E	Height to Drain F
S35TPP	22.75	19	41.5	38.5	13.875	7.875
S50TPP	26	22	43	40	13.875	7.875
S70TPP	28	24	48.125	45.125	13.875	7.875

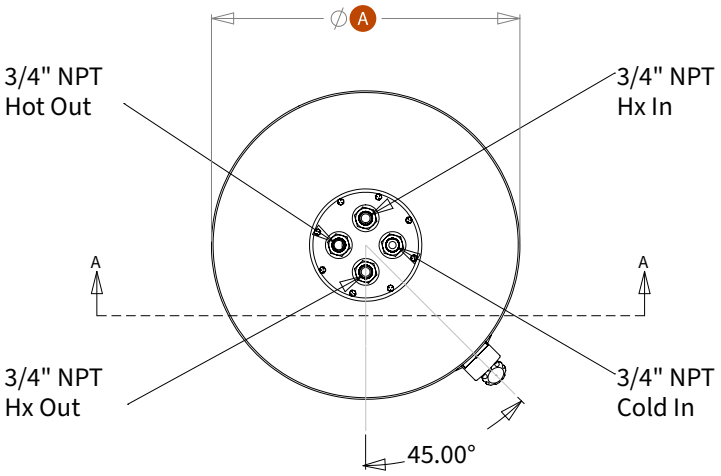

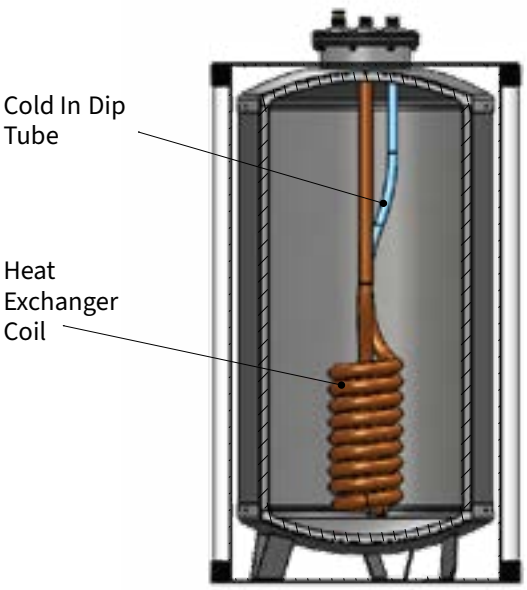

SECTION A-A

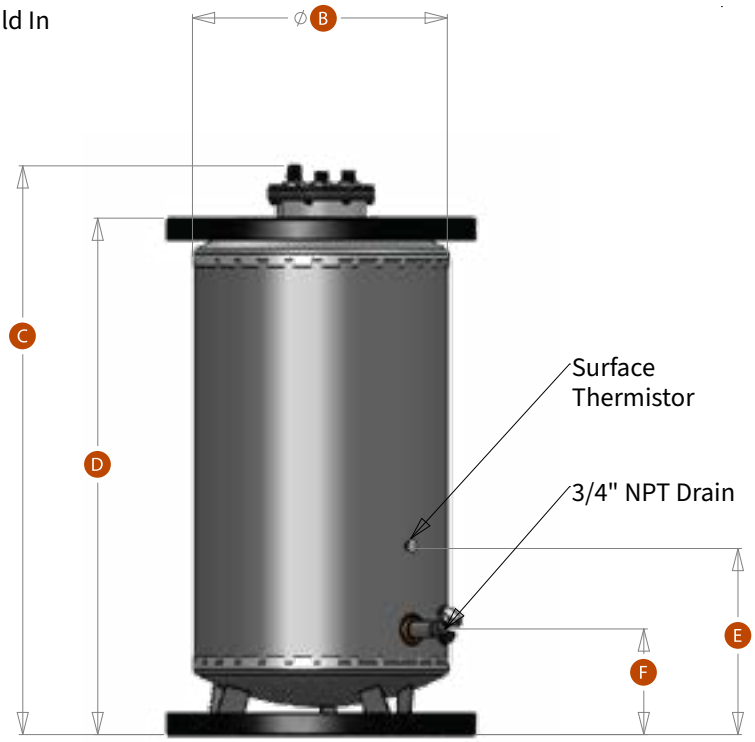

TANK SPECIFICATIONS 70DTPP

We also offer a D model configuration (70DTPP). The D model has a larger coil and larger fittings with the cold water inlet located on the bottom of the tank instead of the top.

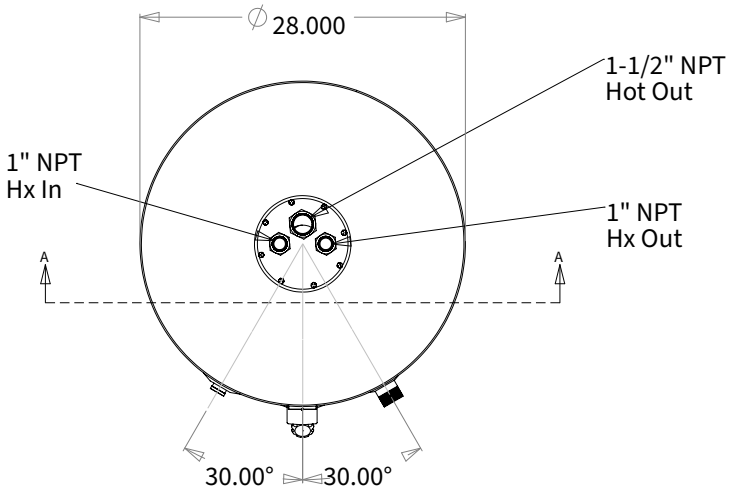

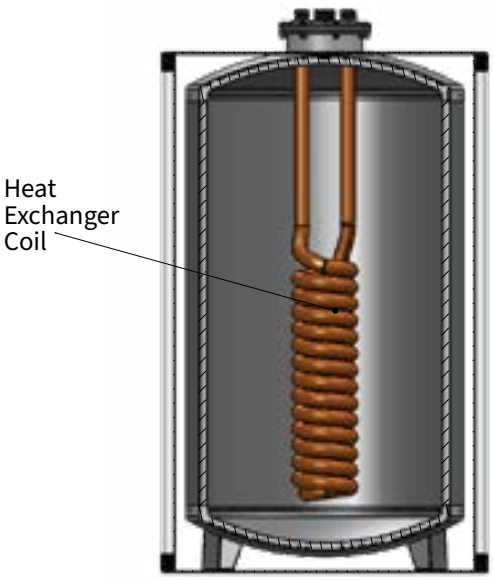

SECTION A-A

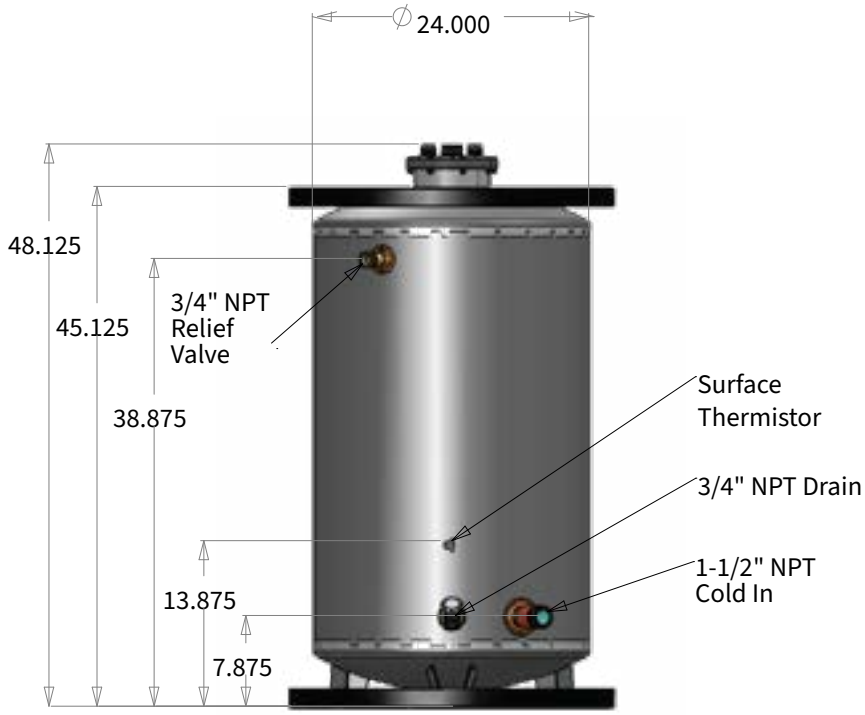

OPTIONS FOR ALL MODELS:

- Double wall heat exchanger (except commercial)
- Back-up electric heating element for supplemental heating (specify wattage and voltage)
- Optional Lifetime Limited Warranty (except commercial)

RESIDENTIAL

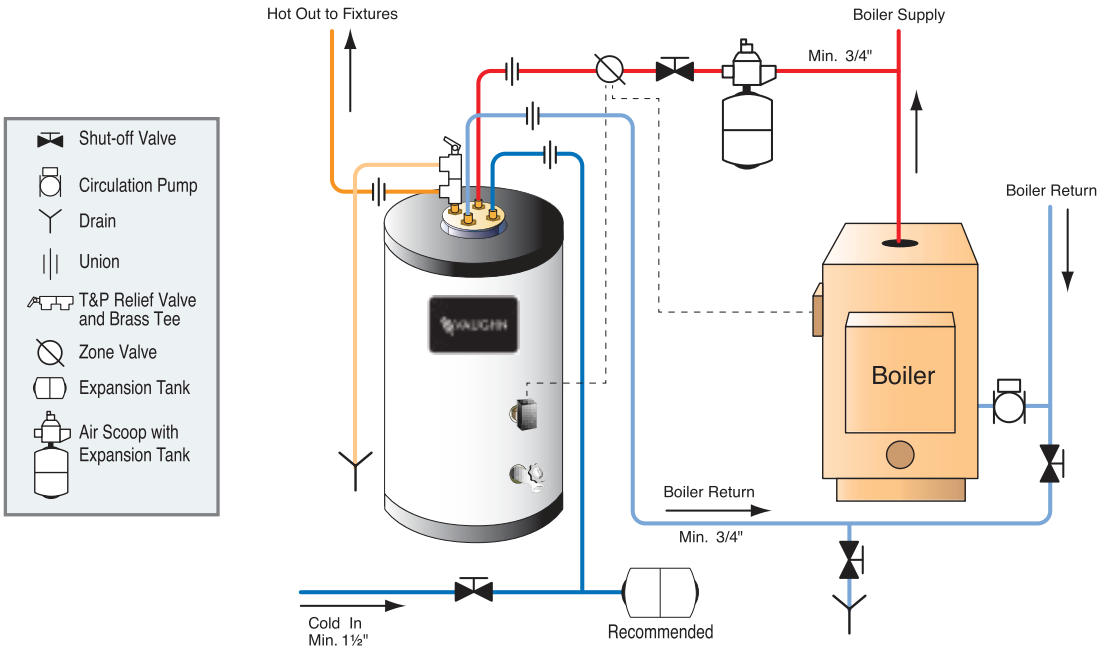

COMMERCIAL

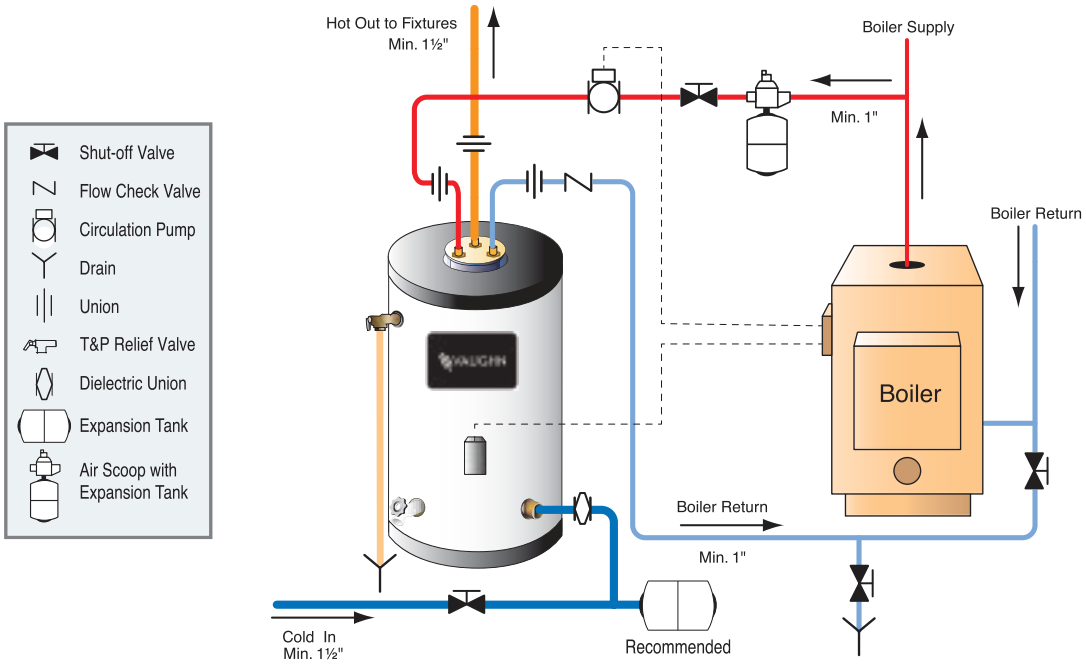

PERFORMANCE SPECIFICATIONS

AHRI Certified

Model	First Hour Rating (GPH)		Boiler Output (@180°F)	Continuous Draw Rating	Boiler Water Continuous Flow	Standby Heat Loss
	Rating not certified by AHRI 115°F	135°F	BTU/HR	GAL/HR	Flow Rate (GPM)	°F/HR
S35TPP	300	200	106,000	170	8 GPM	0.70
S50TPP	320	225	117,000	180	8 GPM	0.60
S70TPP	340	294	128,000	230	8 GPM	0.50
S70DTPP	475	365	178,000	305	14 GPM	0.60

First hour ratings based on:

- 58°F inlet water temperature
- Outputs may vary depending on boiler size, boiler water supply temperature, flow rate through coil and circumstances of installation and use.
- Other ratings and additional boiler temperatures available at vaughncorp.com

COIL CURVES

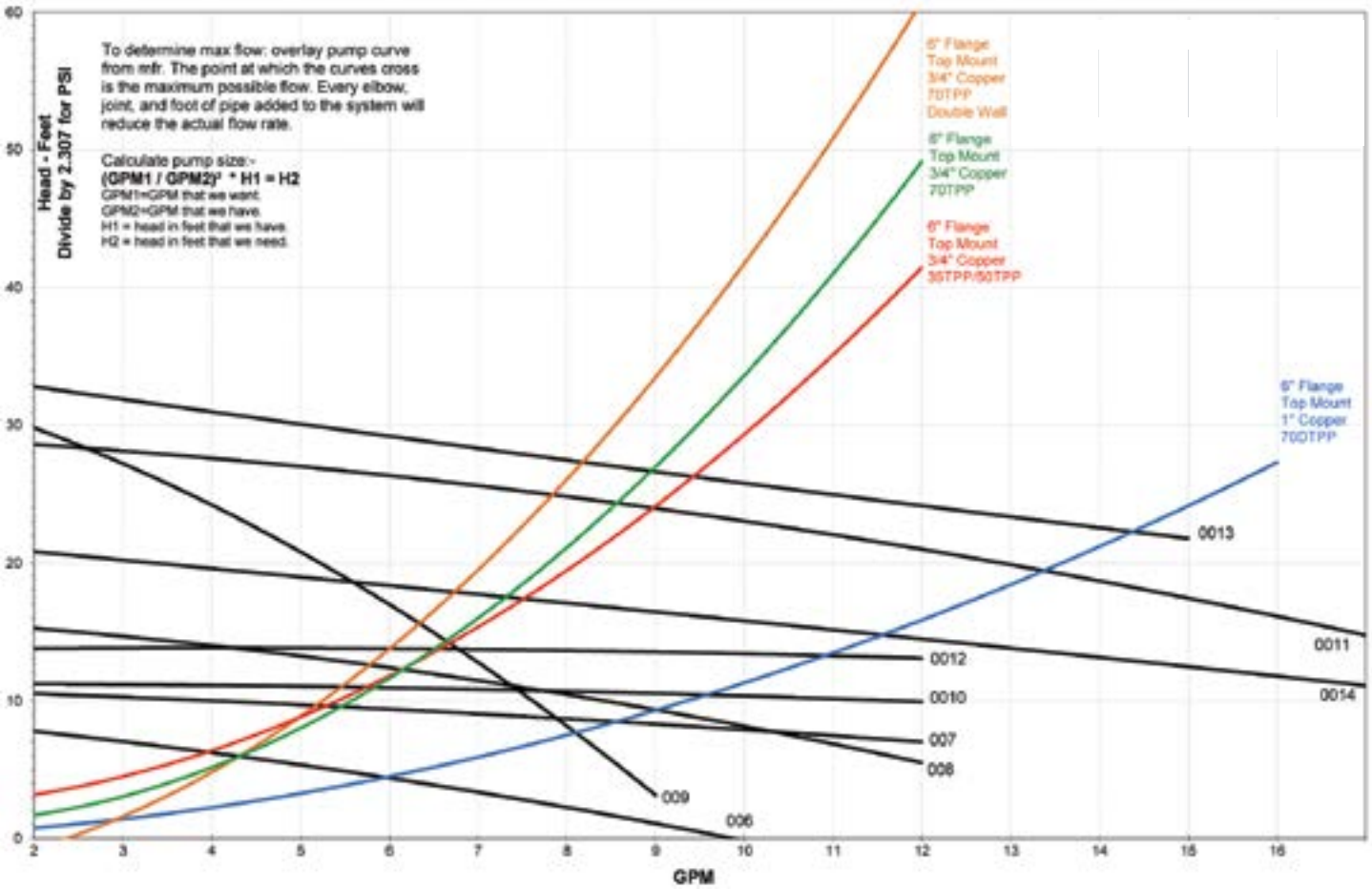

The Difference: HydraStone™ Cement Lining

Cement lined tanks offer significant longevity, trouble-free operation and a lower lifetime cost.

Our tanks are lined with a minimum of 1/2 inch high density HydraStone cement – 100 times thicker than glass lining.

Full coverage is achieved by injecting the precise amount of HydraStone cement into each tank and then centrifugally spun to ensure complete and uniform coverage. This process provides maximum protection from the corrosive effects of hot water. Additionally, cement lined tanks do not require a sacrificial anode, eliminating periodic inspections and replacement costs associated with glass lined tanks.

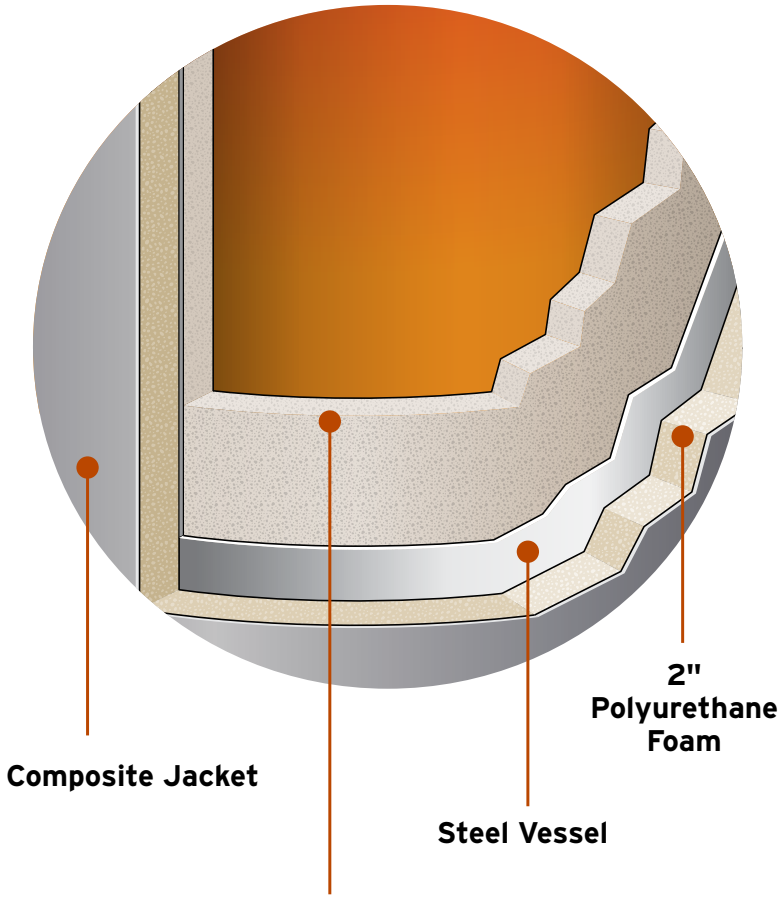

5/1000 inch glass lining **VS** **1/2 inch HydraStone cement lining**

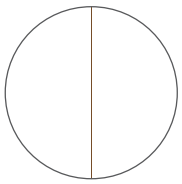

(actual size)

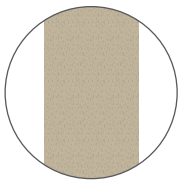

(actual size)

Vaughn is the leading manufacturer of HydraStone (HS) lined and Featherweight (FW) Thermoplastic water heaters. We manufacture 30-120 gallon electric, hybrid, indirect, and solar water heaters for residential and commercial applications as well as energy controllers and electronic devices.

To learn more, contact us

978-462-6683 | vaughncorp.com | sales@vaughncorp.com
26 Old Elm Street | P.O. Box 5431 | Salisbury, MA 01952

V1012-C-20251125